CO2037 – Electrical Electronic Circuits

Field-Effect Transistor

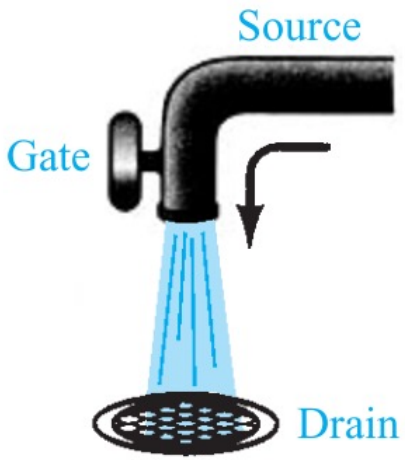

Image Source: Internet

Field-Effect Transistor (FET)

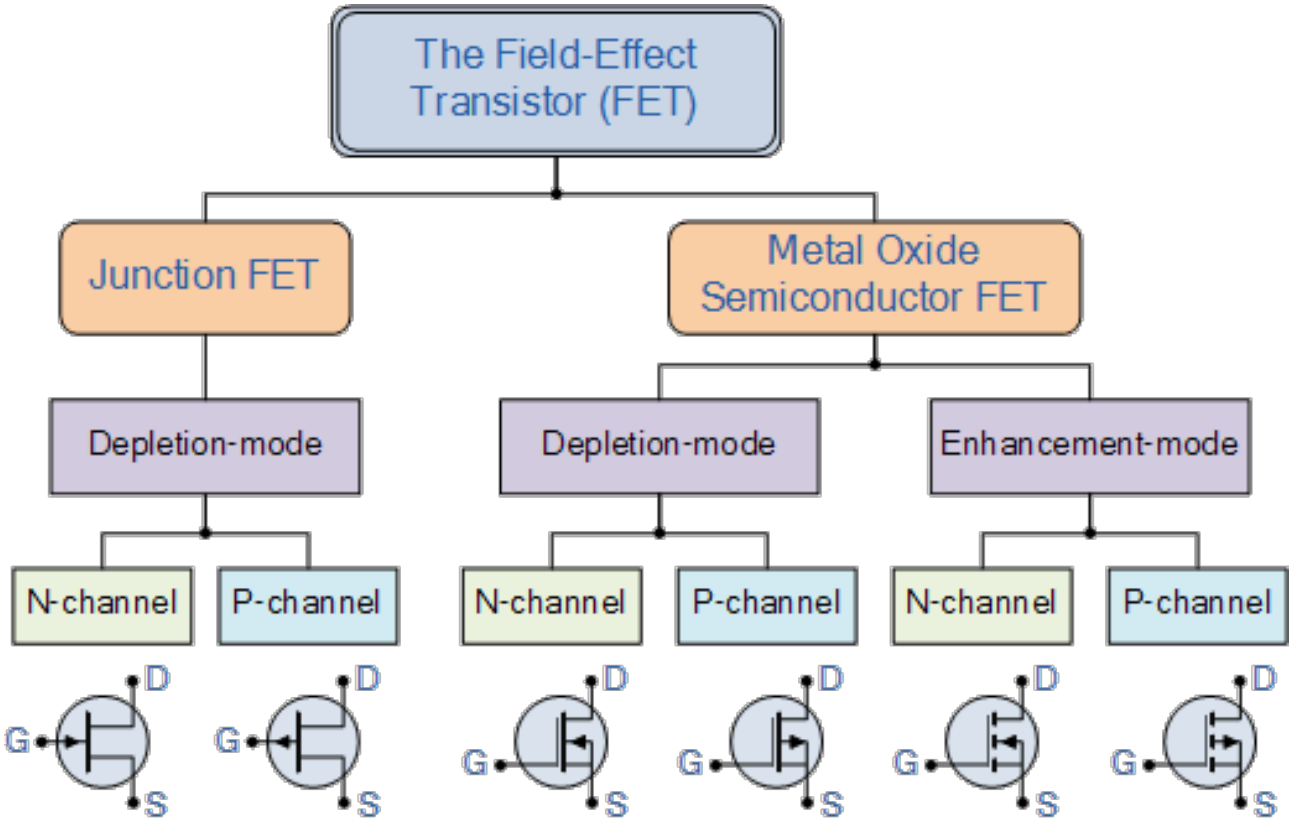

https://www.youtube.com/watch?v=cOICDYuY-gA

JFET

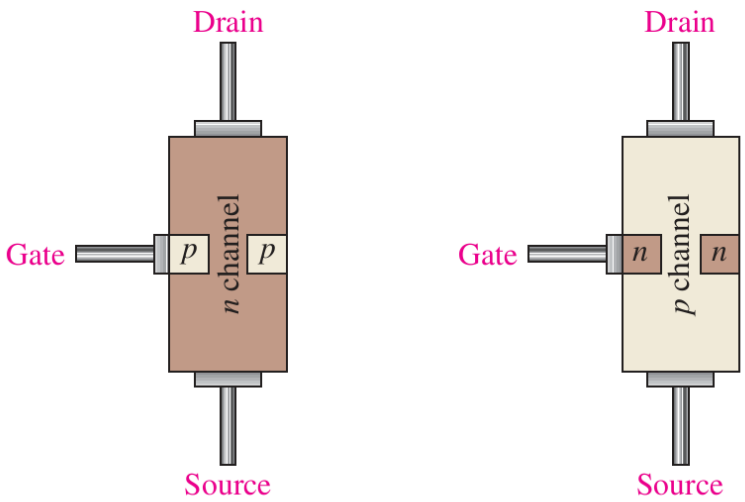

(a) *n* channel (b) *p* channel

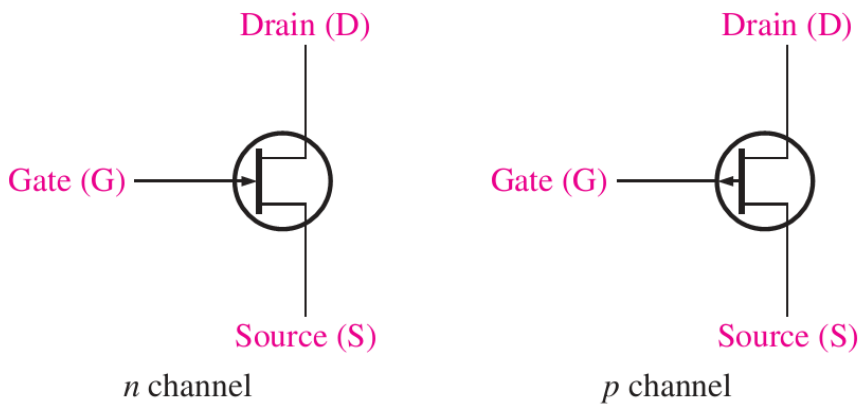

n channel *p* channel

https://www.youtube.com/watch?v=2I_8YNVgbEw

JFET Operation

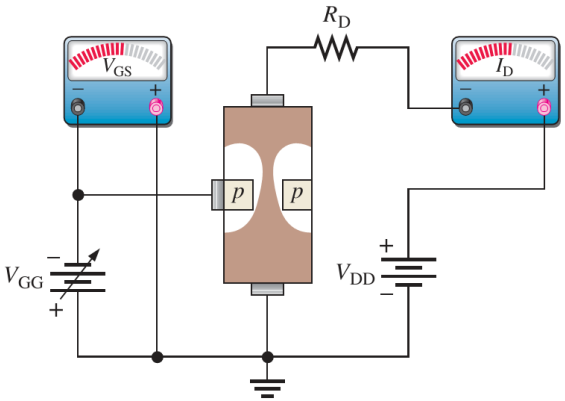

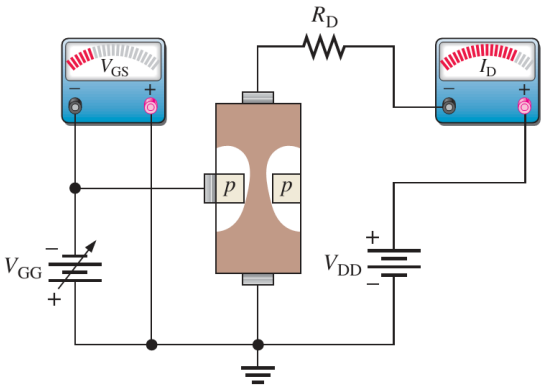

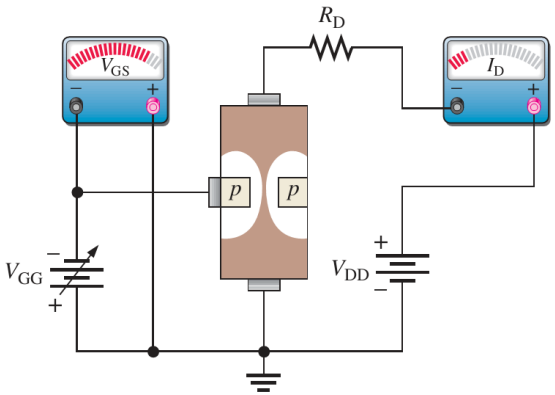

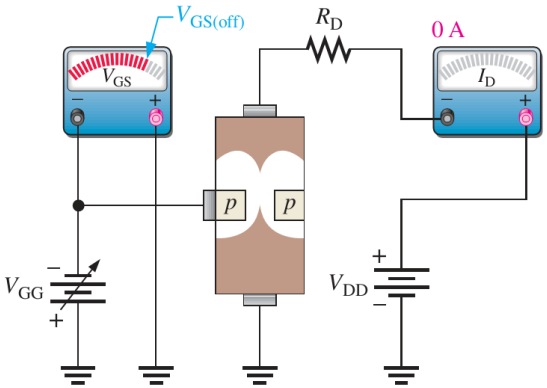

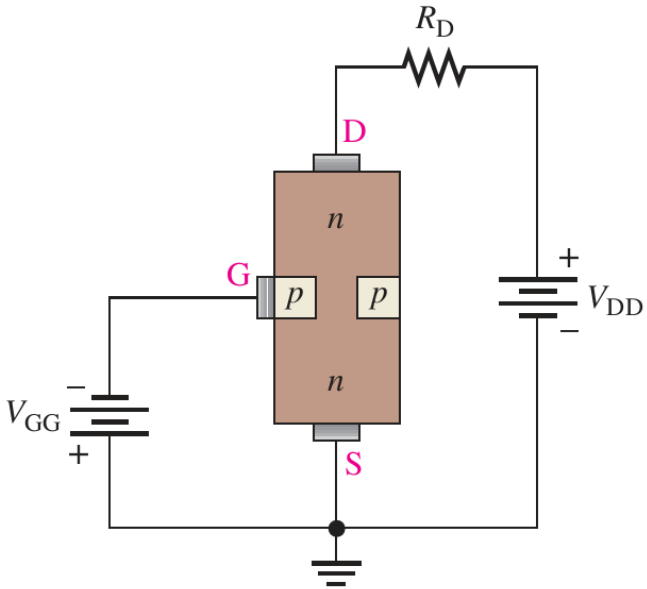

JFET Characteristic

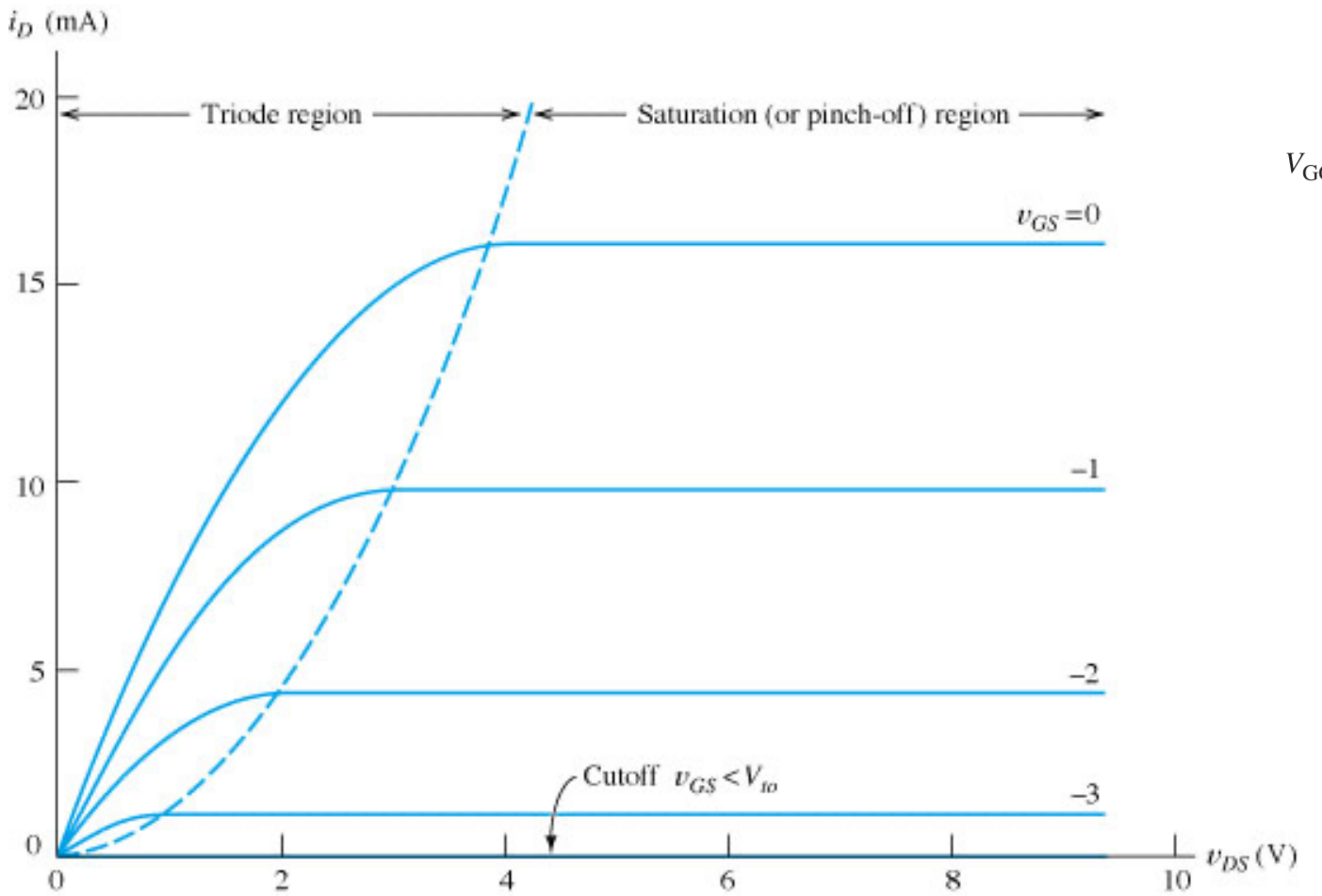

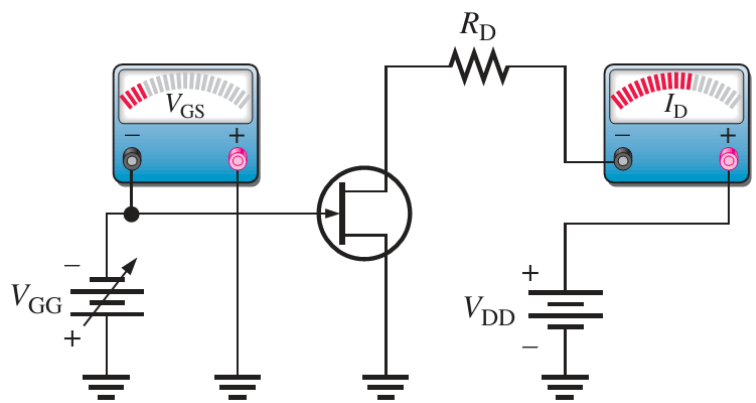

JFET Transfer Curve

$$I_D = I_{DSS}\left(1 - \frac{V_{GS}}{V_P}\right)^2$$

$$I_D \cong I_{DSS}\left(1 - \frac{V_{GS}}{V_{GS(off)}}\right)^2$$

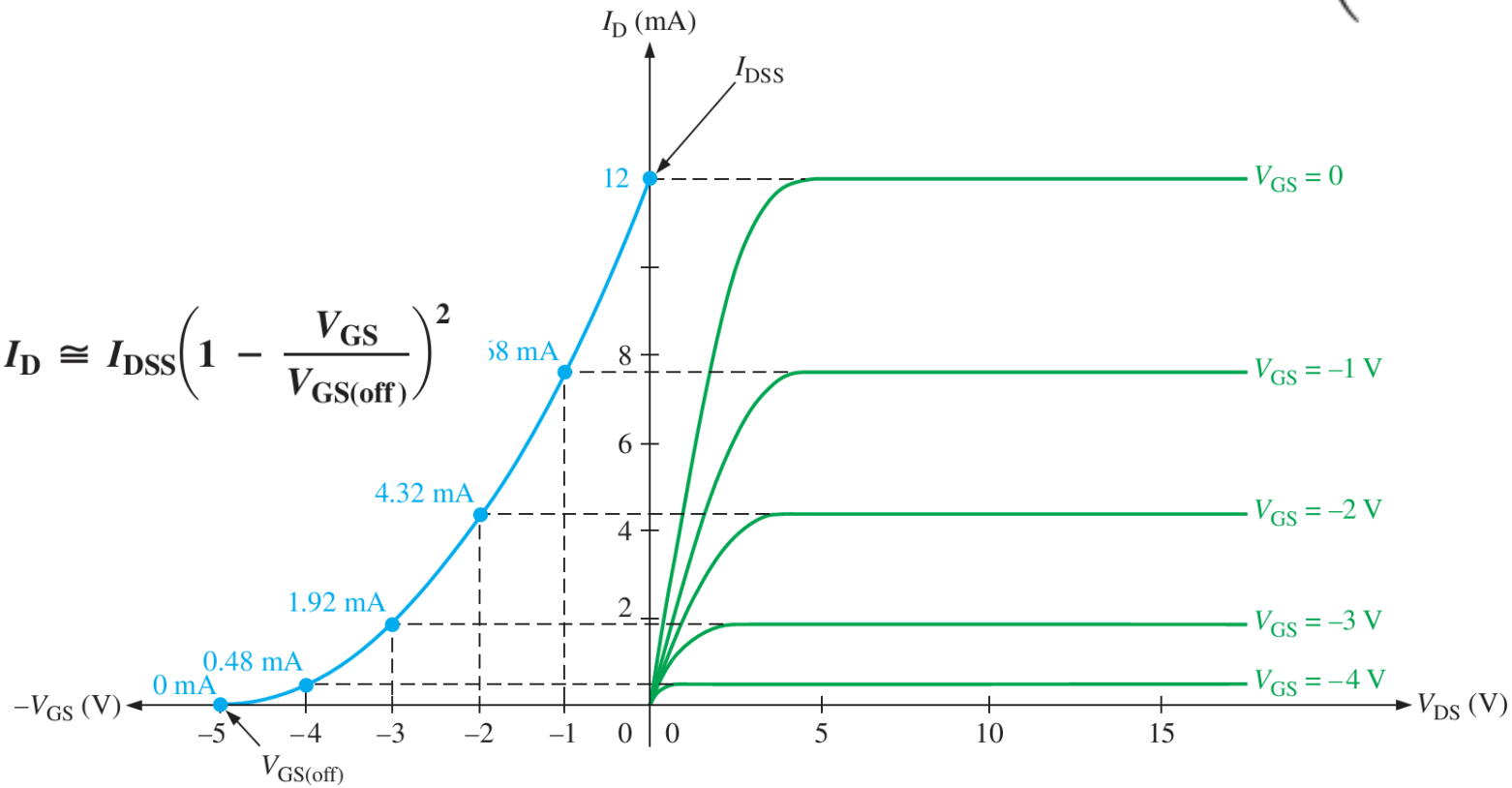

JFET vs. BJT

JFET		BJT
$I_D = I_{DSS}\left(1 - \frac{V_{GS}}{V_P}\right)^2$	$\Leftrightarrow$	$I_C = \beta I_B$
$I_D = I_S$	$\Leftrightarrow$	$I_C \cong I_E$
$I_G \cong 0\ \text{A}$	$\Leftrightarrow$	$V_{BE} \cong 0.7\ \text{V}$

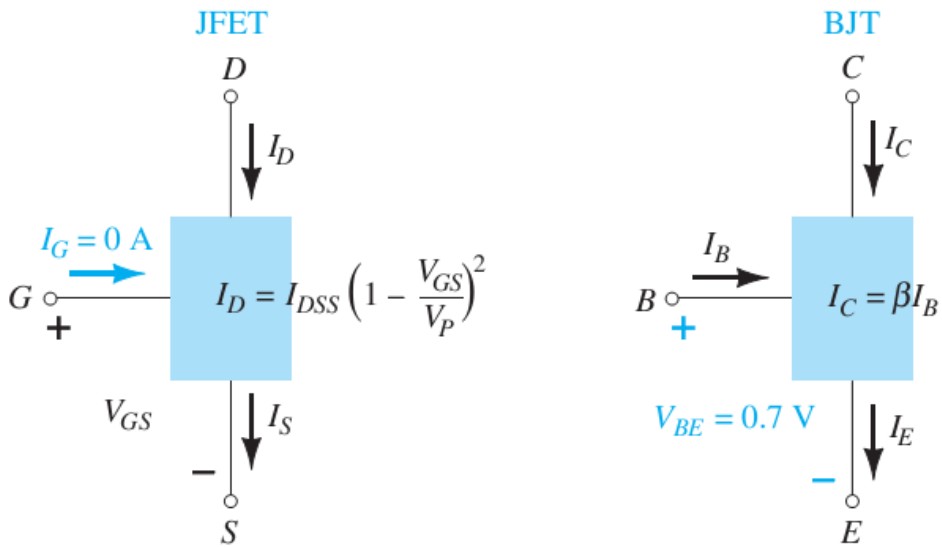

JFET Working Mode

- Fixed-bias
- Self-bias
- Voltage-divider bias

JFET Fixed-bias	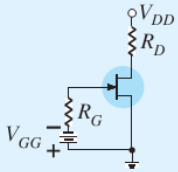	$V_{GS_Q} = -V_{GG}$ $V_{DS} = V_{DD} - I_D R_S$	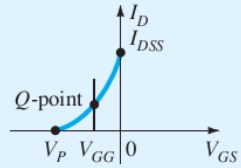
JFET Self-bias	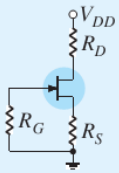	$V_{GS} = -I_D R_S$ $V_{DS} = V_{DD} - I_D(R_D + R_S)$	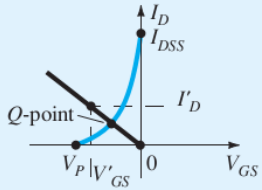
JFET Voltage-divider bias	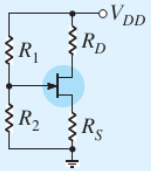	$V_G = \frac{R_2 V_{DD}}{R_1 + R_2}$ $V_{GS} = V_G - I_D R_S$ $V_{DS} = V_{DD} - I_D(R_D + R_S)$	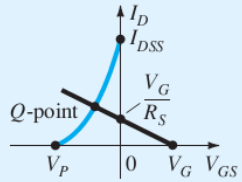

https://www.youtube.com/watch?v=vuEbwmEVSsM

MOSFET

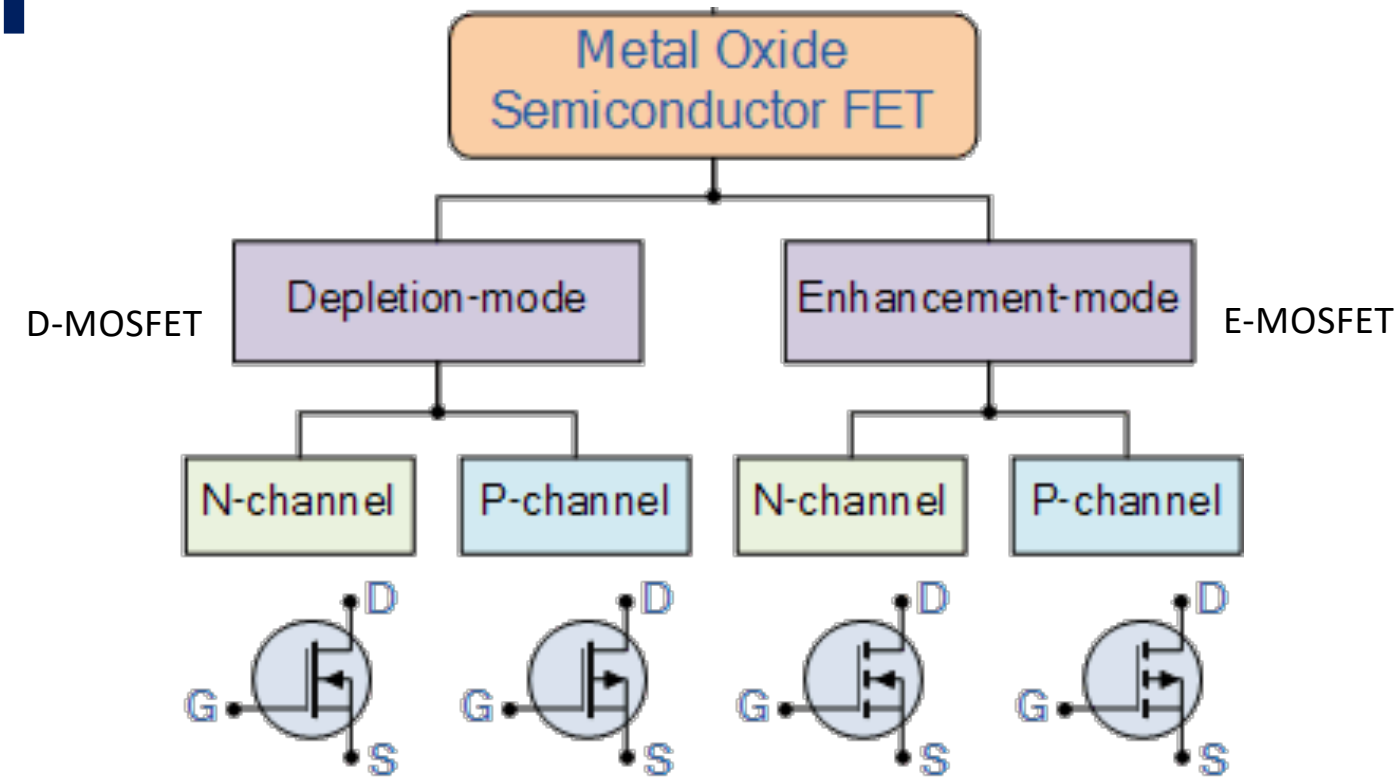

https://www.youtube.com/watch?v=p34w6lSouZY

D-MOSFET

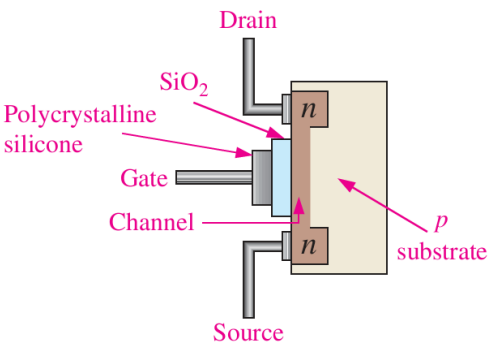

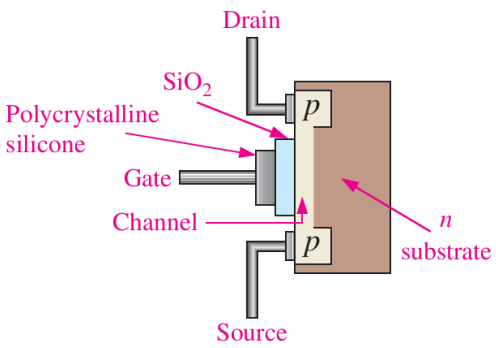

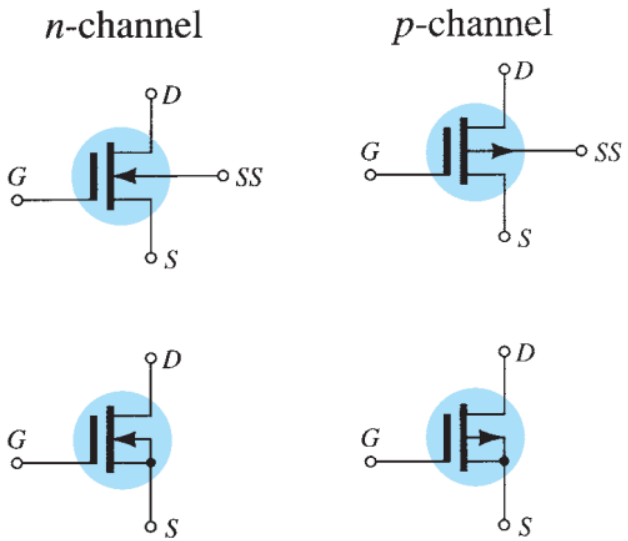

https://www.youtube.com/watch?v=XqGBNyhImV4

D-MOSFET Operation

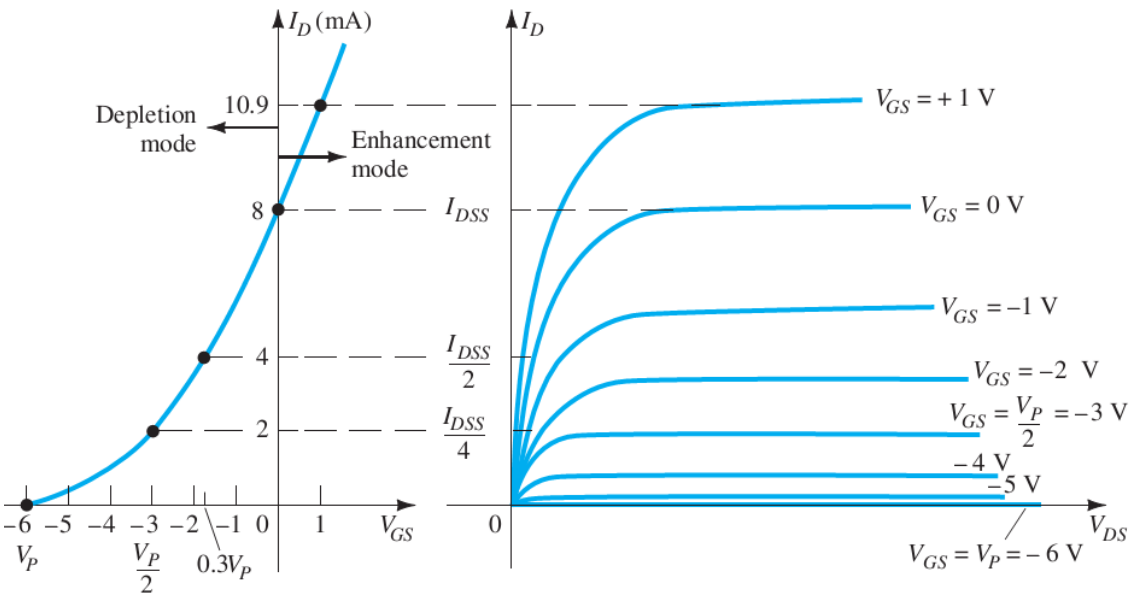

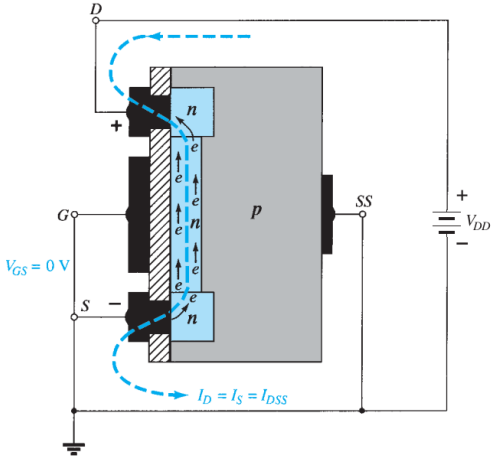

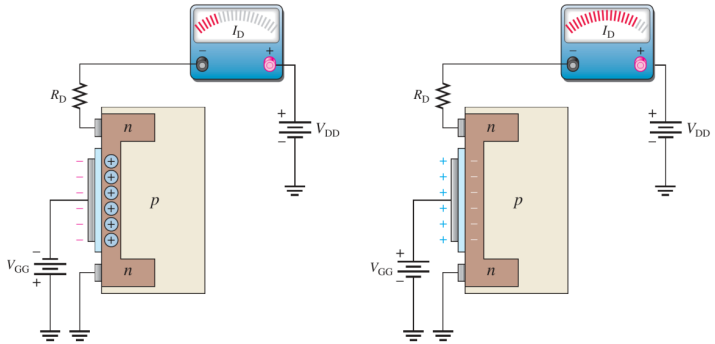

E-MOSFET

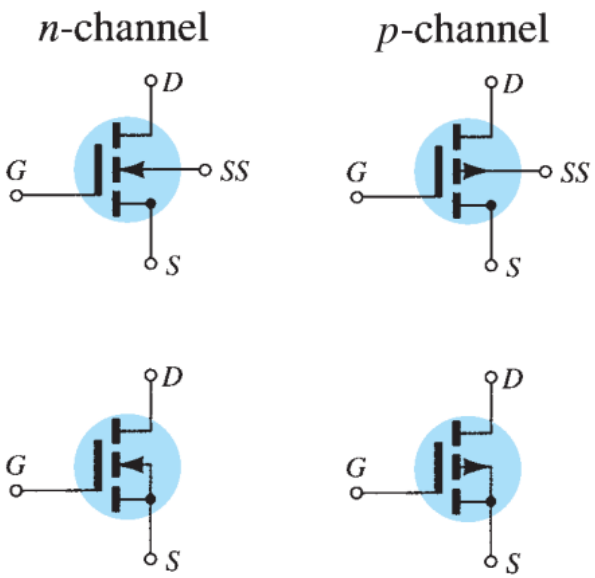

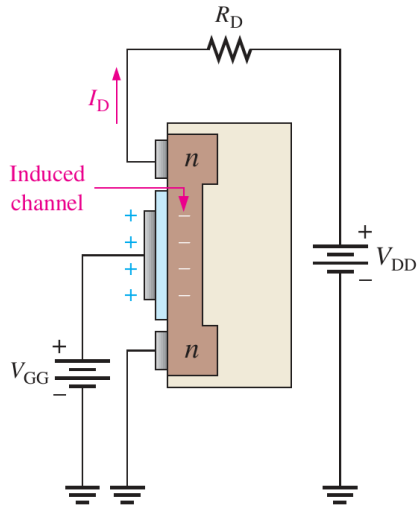

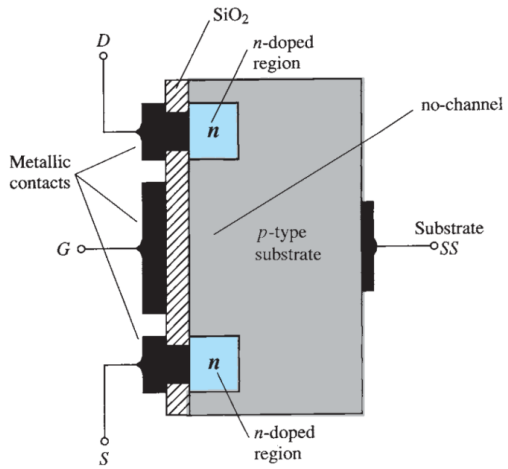

https://www.youtube.com/watch?v=l9LBIy9loxo

E-MOSFET Operation

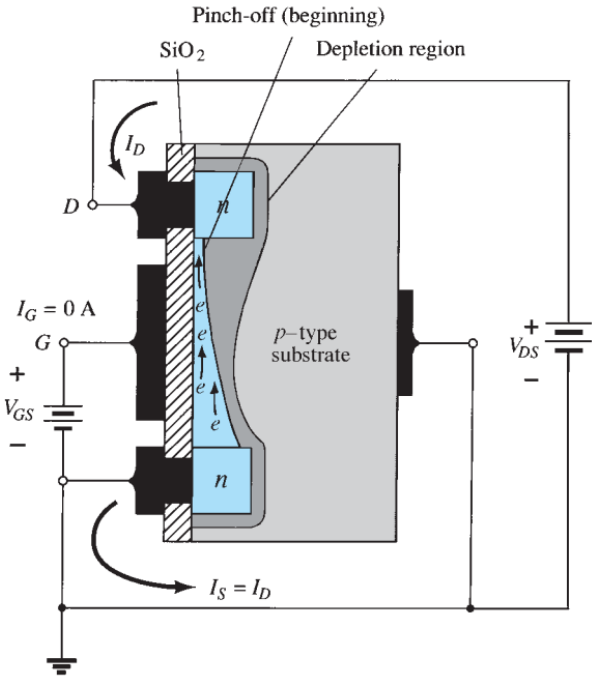

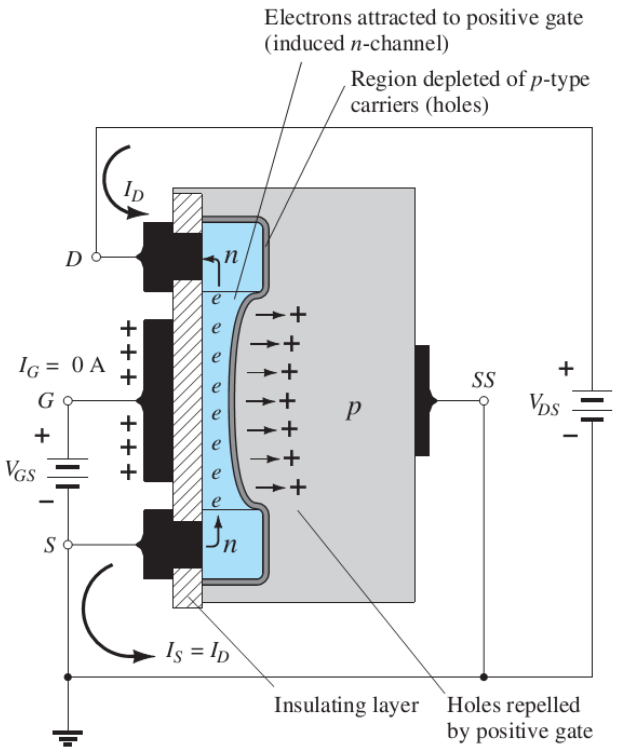

E-MOSFET Transfer Curve

To determine I_D given V_{GS}:

$$I_D = k(V_{GS} - V_T)^2$$

Where:

V_T = threshold voltage or voltage at which the MOSFET turns on

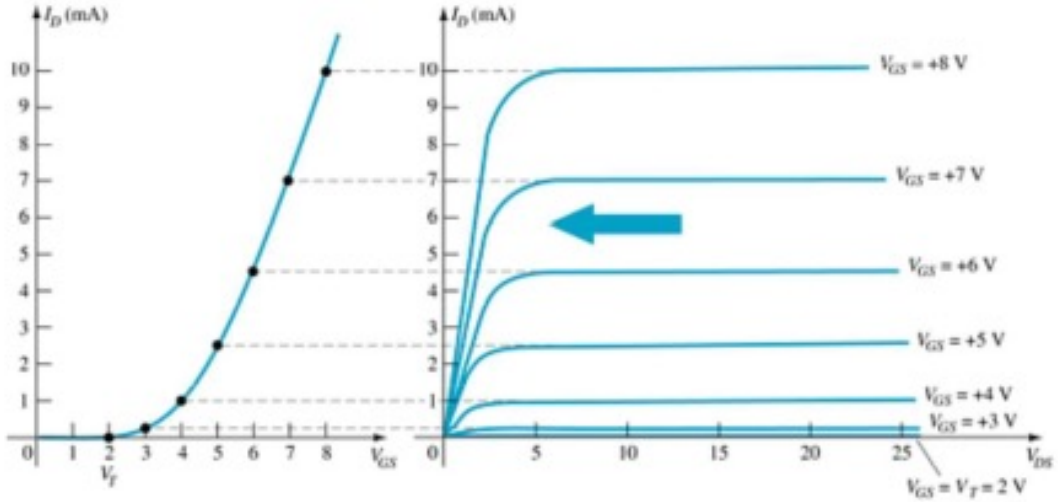

***k*, a constant, can be determined by using values at a specific point and the formula:**

$$k = \frac{I_{D(ON)}}{(V_{GS(ON)} - V_T)^2}$$

V_{DSsat} can be calculated by:

$$V_{Dsat} = V_{GS} - V_T$$

E-MOSFET Datasheet

2N4351

MOSFET SWITCHING

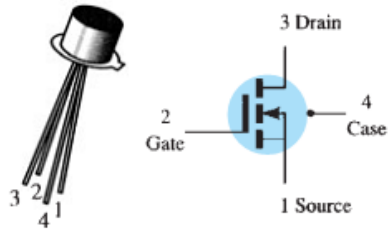

N-CHANNEL – ENHANCEMENT

MAXIMUM RATINGS

Rating	Symbol	Value	Unit
Drain–Source Voltage	V_{DS}	25	Vdc
Drain–Gate Voltage	V_{DG}	30	Vdc
Gate–Source Voltage*	V_{GS}	30	Vdc
Drain Current	I_D	30	mAdc
Total Device Dissipation @ $T_A = 25°C$ Derate above 25°C	P_D	300 1.7	mW mW/°C
Junction Temperature Range	T_J	175	°C
Storage Temperature Range	T_{stg}	–65 to +175	°C

* Transient potentials of ± 75 Volt will not cause gate-oxide failure.

ELECTRICAL CHARACTERISTICS ($T_A = 25°C$ unless otherwise noted.)

Characteristic	Symbol	Min	Max	Unit
OFF CHARACTERISTICS				
Drain-Source Breakdown Voltage ($I_D = 10\ \mu A$, $V_{GS} = 0$)	$V_{(BR)DSX}$	25	–	Vdc
Zero-Gate-Voltage Drain Current ($V_{DS} = 10$ V, $V_{GS} = 0$) $T_A = 25°C$ $T_A = 150°C$	I_{DSS}	– –	10 10	nAdc μAdc
Gate Reverse Current ($V_{GS} = \pm 15$ Vdc, $V_{DS} = 0$)	I_{GSS}	–	± 10	pAdc
ON CHARACTERISTICS				
Gate Threshold Voltage ($V_{DS} = 10$ V, $I_D = 10\ \mu A$)	$V_{GS(Th)}$	1.0	5	Vdc
Drain-Source On-Voltage ($I_D = 2.0$ mA, $V_{GS} = 10$V)	$V_{DS(on)}$	–	1.0	V
On-State Drain Current ($V_{GS} = 10$ V, $V_{DS} = 10$ V)	$I_{D(on)}$	3.0	–	mAdc

MOSFET Working Mode

Depletion-type MOSFET Fixed-bias (and MESFETs)	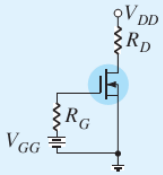	$V_{GS_Q} = +V_{GG}$ $V_{DS} = V_{DD} - I_D R_S$	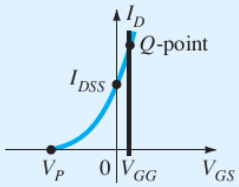
Depletion-type MOSFET Voltage-divider bias (and MESFETs)	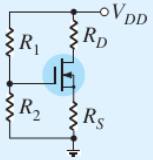	$V_G = \frac{R_2 V_{DD}}{R_1 + R_2}$ $V_{GS} = V_G - I_S R_S$ $V_{DS} = V_{DD} - I_D(R_D + R_S)$	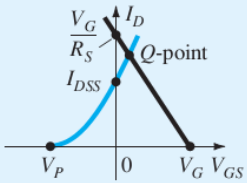
Enhancement type MOSFET Feedback configuration (and MESFETs)	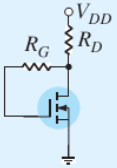	$V_{GS} = V_{DS}$ $V_{GS} = V_{DD} - I_D R_D$	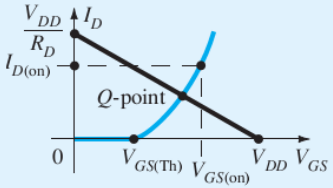
Enhancement type MOSFET Voltage-divider bias (and MESFETs)	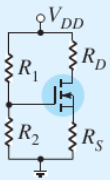	$V_G = \frac{R_2 V_{DD}}{R_1 + R_2}$ $V_{GS} = V_G - I_D R_S$	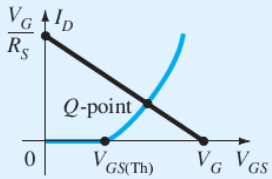

https://www.youtube.com/watch?v=vBvLu3euc2Q

Exercise 2

- Determine the correct type (p-channel or n-channel, D-type or E-type) of the following MOSFETs

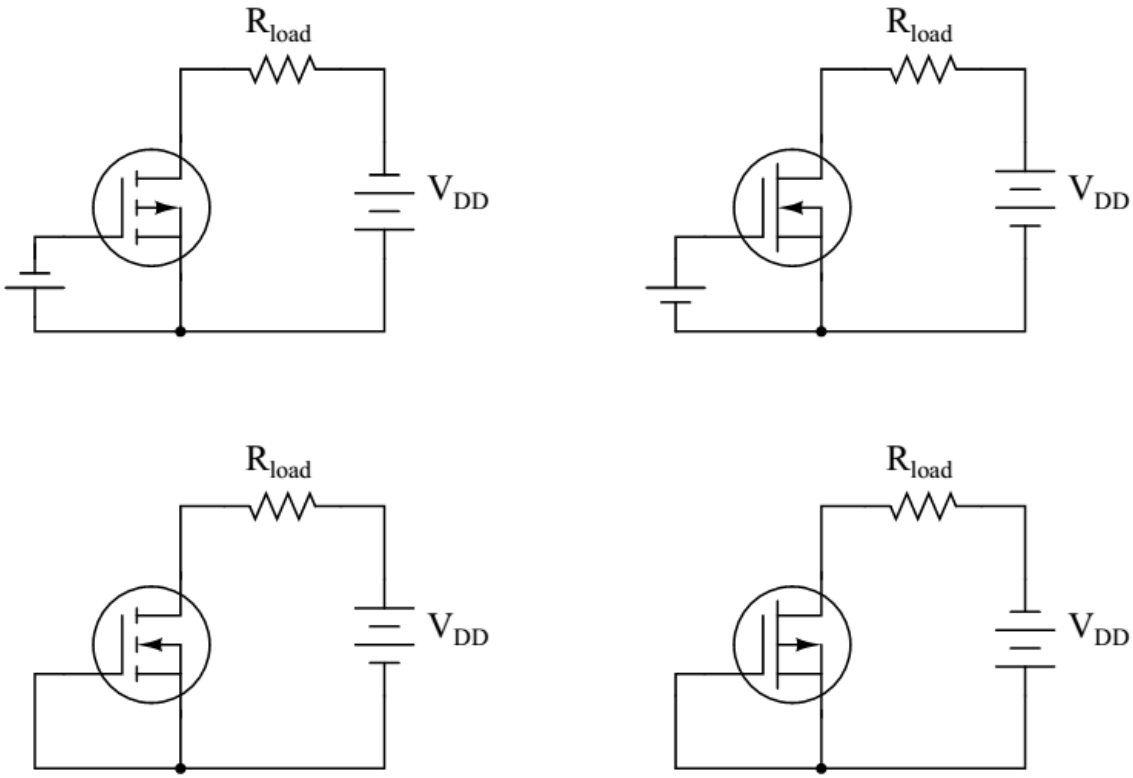

Exercise 3

- Determine the LED status (ON or OFF) regarding each position of switch.

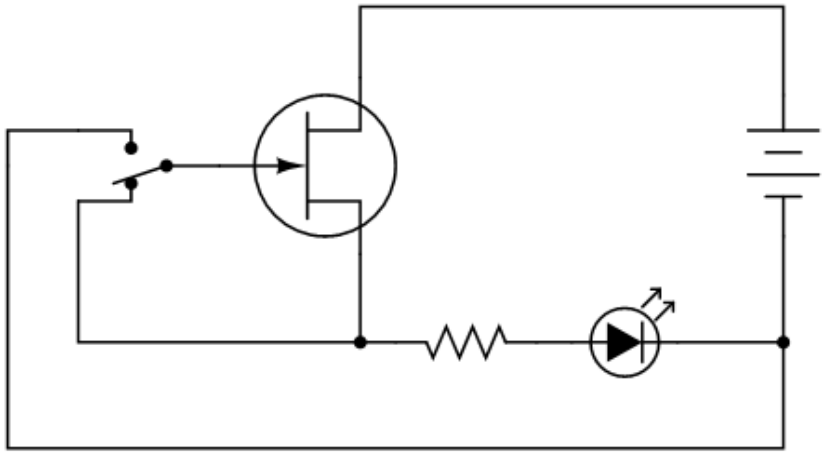

Exercise 4

- Determine V_{GS} , V_{DS} and I_D

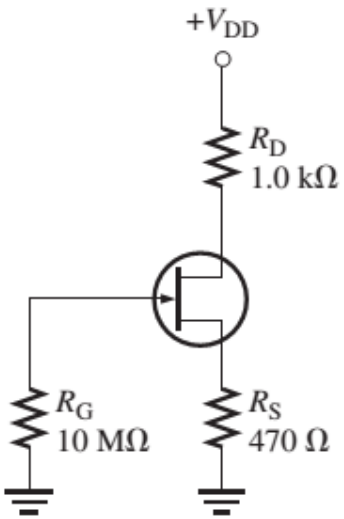

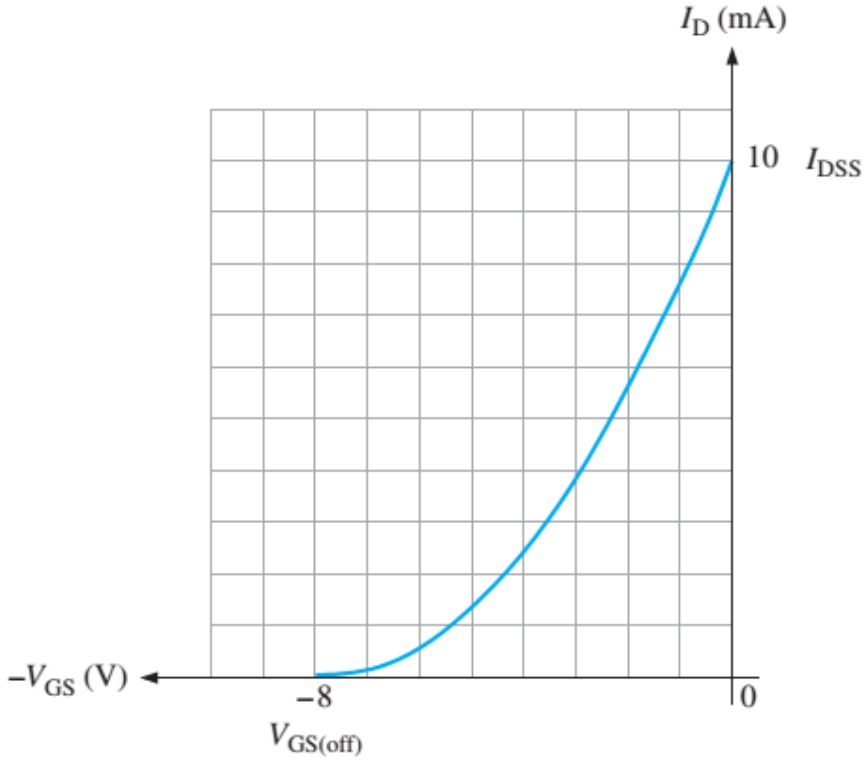

Exercise 5

- Determine k, I_D, V_{GS} and V_{DS} for given E-MOSFET where
  $V_{GS(on)} = 4V$ and $I_{D(on)} = 200mA$
  $V_{GS(th)} = 2V$ $(=V_T)$

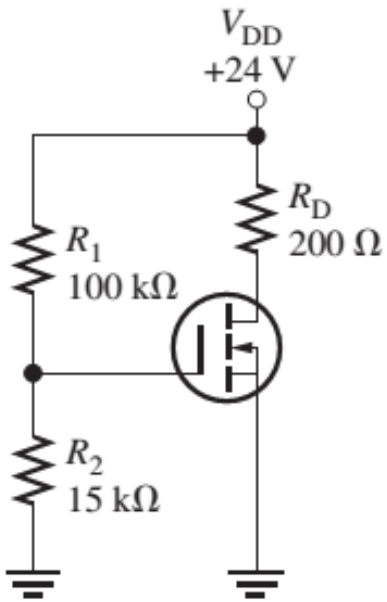

- Hint:

Enhancement type MOSFET Voltage-divider bias (and MESFETs)	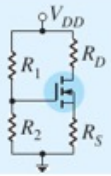	$V_G = \frac{R_2 V_{DD}}{R_1 + R_2}$ $V_{GS} = V_G - I_D R_S$

To determine I_D given V_{GS}:

$$I_D = k(V_{GS} - V_T)^2$$

***k*, a constant, can be determined by using values at a specific point and the formula:**

$$k = \frac{I_{D(ON)}}{(V_{GS(ON)} - V_T)^2}$$

Exercise 6

JFET Voltage-divider bias	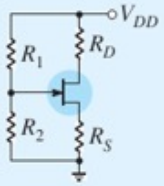	$V_G = \frac{R_2 V_{DD}}{R_1 + R_2}$ $V_{GS} = V_G - I_D R_S$ $V_{DS} = V_{DD} - I_D(R_D + R_S)$	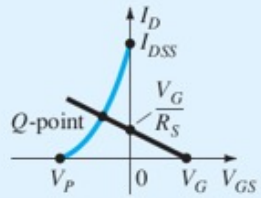

- Determine V_{GS} and V_{DS} for the given JFET, where I_{DSS} = 5mA and $V_{GS(off)}$ = -4V

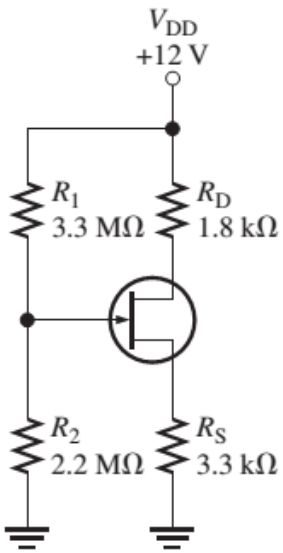

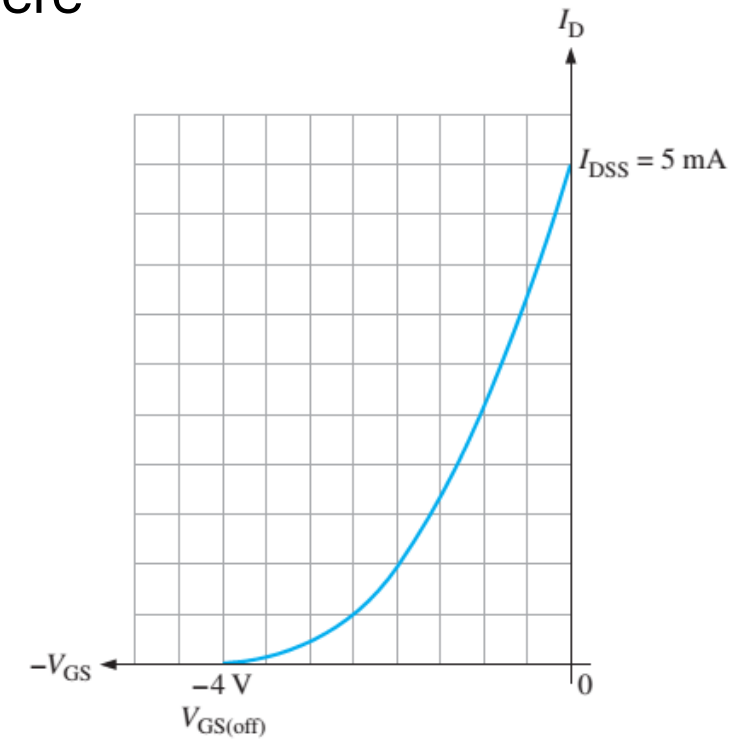

Further Reading & Reference